RMD News
The Rotational Molding Division of SPE Newsletter

3rd Quarter 2015 Volume 15 Issue 3

In the News:
Winners of the 2015 Rotational Molding Product Design Competition Announced

In the News: Gary McQuay

New Rotomolding Division Chair

Meet Our Members:

Larry Whittemore

Global Product Manager
Stoner, Inc.

VISIT US ON OUR WEBSITE
www.rotational-molding.4spe.org

In this issue:

Chairman's Message

Gary McQuay

I am grateful to have been elected Chairman of the Board of the SPE Rotational Molding Division. I am also a bit intimidated by the abundance of knowledge and experience of other members who have contributed so much to SPE, the rotational molding industry, and this Board. I want to express my gratitude to our past Chairman, Rob Donaldson, for his leadership and guidance over the past few years.

Preparations are underway for 2016 TOPCON, headed up by co-chairs Rob Donaldson and Larry Whittemore. The conference is scheduled for June 5-8 in Independence, Ohio. So please mark your calendars because you don't want to miss this informative conference.

ANTEC 2016 will be held in Indianapolis, IN on May 23-25. Again, I encourage everyone to attend and participate.

I am actively seeking candidates for the following positions on the RMD board: Councilor, Education Committee, and Membership Committee. I ask all board members to consider volunteering for these vital positions.

I look forward to serving as Chairman of the Board, and I will do my best to meet the expectations of SPE and the Rotational Molding division.

Sincerely,

Gary E. McQuay

Newsletter Comments/Questions? Contact:

Sponsorship: Russ Boyle at
russ.boyle@gulfviewplastics.com
or call (727) 379-3072

Editor: Melissa Inman at (919)-888-0940
melissa.inman@gulfviewplastics.com

Asst. Editor: Dr. Peter Mooney
PlasRes@aol.com or call (336) 998-8004

INDEX

Meet Our Members

Larry Whittemore

Global Product Manager
Stoner, Inc.

STONER INCORPORATED – Quarryville, PA

As the global product manager for the Plastics Business Larry is responsible for new product development, sales, marketing, distribution, pricing, as well as P&L activities for all Stoner Product lines of mold releases, mold cleaners, and rust preventatives that are sold into the plastics industry throughout the world. He also supports and directs a global sales network for the plastics industry. He has been active in ARM for 6 years and a senior member of SPE and SPI for much of his plastics career.

BASF CORPORATION - Mount Olive, NJ

As a senior sales representative III he managed the six-state Great Lakes territory comprised of Michigan, Illinois, Wisconsin, North Dakota, South Dakota, and Minnesota for all BASF polystyrene and SBS elastomeric resins. He managed existing accounts with a focus on developing new business within the plastics processing Industry, and he conducted technical training seminars.

CFC INTERNATIONAL - Chicago Heights, IL

KELCH CORPORATION - Mequon, WI

GENERAL ELECTRIC PLASTICS - Milwaukee, WI

Larry and his wife, Alice, live in York, PA. They have 3 children and 2 grandchildren. He is very active in his church, loves to fly fish and travel in his spare time, and has been in the plastics industry for over 25 years.

Larry Whittemore
Global Product Manager
Stoner, Inc.
PO BOX 65
1070 Robert Fulton Highway
Quarryville, PA 17566
LWhittemore@StonerSolutionc.com
800-227-5538 Ext. 3118
800-515-5150 Fax

In the News

Winners of the 2015 Rotational Molding Product Design Competition Announced

AKRON, Ohio, July 9, 2015 – Winsell Incorporated today announced the winners of the 2015 Rotational Molding Product Design Competition. The goal of this annual contest is to inspire emerging industrial design talent to create breakthrough consumer products that utilize the latest technologies in rotational molding. Judging criteria included originality, processability, growth potential, beauty and visual appeal, tool-building compatibility, and use of appropriate materials.

First Place was awarded to Rebecca Wereley of the University of Wisconsin-Stout for her design of the Swing Nook. Wereley conceived the Swing Nook as "an outdoor product/playset for children with Autism Spectrum Disorder (ASD) that uses rotomolding manufacturing techniques." Swings are helpful for children with ASD because they provide a place to feel safe and secluded while avoiding over-stimulation. Swings are also used to help with vestibular therapy (sense of balance) and sensory integration. Wereley's entry specified manufacturing process details, including size and shape requirements that suit children of ages 5-12.

First Place winner: the Swing Nook, by Rebecca Wereley

Second Place winner: the Rotochair, by Matthew Bruhn

Second Place was awarded to Matthew Bruhn of the University of Wisconsin-Stout for his design of the Rotochair. The goal for his design was "to produce an aesthetically-pleasing piece of furniture that employs the rotomolding process and is suitable for indoor/outdoor use." Bruhn specified kiss-offs in his design to keep the chair legs from rotating and to provide extra support underneath the seat.

Continued on page 5

Continued from page 4

10 **Honorable Mentions** were awarded to the following students:

- Milwaukee Institute of Art and Design (MIAD): Adam Carter, Jacqueline Edwards, Ben Gall, Emelie Troedson
- Purdue University: Brian Kalember, Thomas Richardson
- University of Wisconsin-Stout: Ryne Anderson, Hans Fritz, Alex Greene, Kelsey Hill

The Rotational Molding Product Design Competition is organized by Winsell Incorporated with support from 2015 sponsors Avantech, Diversified Mold & Castings, M. Holland and Polimeros USA.

"The rotational molding industry is fueled by the creative ideas of product designers", says Fred Shockey, Chairman and CEO of Winsell Incorporated. "When we cultivate and celebrate emerging talent in the field, we will thrive. The Product Design Competition gives us a glimpse into the future of rotational molding while also ensuring that future."

About Winsell Incorporated

Winsell Incorporated, headquartered in Akron, Ohio, is the world's only 100% dedicated supplier of granite-effect colorants for rotational molding applications. Through extensive research and continuous innovation of granite formulations the company provides trouble-free processing solutions to rotomolders. To learn more read about the Winsell Granite Difference. Visit Winsell online at www.winsellinc.com or on Facebook.

Submit your news story or technical article to the RMD Newsletter !

The submission deadline for the next edition is Nov 1st.

In The News

Special Forums Added to ARM Annual Meeting

As part of the ARM annual meeting in Denver to be held on November 1 – 4 our committees have added special forums to the schedule to provide added value, offer more opportunities to learn from experts, and grow the reach of the rotomolding process. These forums will be open to all meeting attendees.

Our Education Committee will conduct a town-hall style discussion to bring together rotational molders, designers, compounders, materials suppliers and others to expand the portfolio of rotomolded products and applications. Rotomolders and designers will share a wish-list of physical attributes their customers and prospective customers want to see in plastic parts. The discussion will focus on specific attributes and combinations of attributes (i.e., a scratch-resistant, high-end finish) of polymers. During and after the meeting, the Education Committee will map the needs of rotomolders and designers to different materials available from compounders and material suppliers. We will educate the industry on materials that are currently available and use the information collected to create new projects for our Education Committee.

Our Process Optimization Committee will invite rotomolders to brainstorm with lean expert and keynote speaker, Lonnie Wilson, about the toughest issues they face, how to track expense savings in lean manufacturing, and more. Wilson is the author of How To Implement Lean Manufacturing. He is an aggressive problem-solver, and with his 45 years in industry Wilson has developed the ability to reduce complex problems to simple workable solutions. During his keynote Wilson will share the five leading indicators of cultural change that will not only drive your business to the top of the pack, but allow you to stay there as well.

General session presentations include: Behind the Lines -- Guarding & Machine Safety, A Survey of Rotomolder Safety Issues & Solutions, Case Study of the 2015 Product of the Year (ATV stereo), Case Histories of the Challenges Rotomolding Metal Inserts, and much more. Workshops include: Repair Rejects to Increase Profits, Troubleshooting Color Issues, Troubleshooting Warping Issues, Troubleshooting Mold Maintenance, Best Practices for Customer Service & Retention, and more. Meeting seminars will include Martin Spencer presenting "Design, Mold, and Deliver Better Rotomolded Product" and Michael Paloian's revised seminar on Designing Rotomolded Parts.

For up-to-date meeting information visit: http://rotomolding.org/events/Annual.aspx

Industry News

DISCUSSING THE FEASIBILITY OF IMPLEMENTING ROTATIONAL FOAM MOLDING OPERATIONS BASED ON PHYSICAL BLOWING AGENTS

Remon Pop-Iliev, University of Ontario Institute of Technology, 2000 Simcoe St. N., Oshawa, Ontario, Canada L1H 7K4

Abstract

This paper focuses on evaluating the suitability of technologically-distinctive novel processing concepts for successfully transforming engineering resins into rotationally molded cellular polymeric composite articles of controllable densities in terms of using physical blowing agents while achieving simultaneous retention of fine-celled foam morphologies while maintaining a uniform thickness of the solid skin and while reducing the processing cycle times and energy consumption.

Introduction

The traditional rotational molding process was relatively recently deliberately modified to advantageously produce foamed plastics products, culminating with the fabrication of integral-skin polymeric composite moldings that are characterized with adjacent, but clearly distinct, layers of non-cellular (encapsulating) and cellular (encapsulated) polymeric structures, normally consisting of identical or compatible polyolefin grades.

However, despite these marked process versatility improvements, the fundamental intrinsic drawbacks of the rotational molding fabrication process remain to be: (i) it's very lengthy processing cycle time, (ii) the relatively large energy consumption intensiveness, and (iii) the lack of sufficiently efficient means for real-time control of the process-intrinsic temperature gradient occurring across the mold during both the heating and the cooling segment of the processing cycle in comparison with technologies such as blow molding, thermoforming, and injection molding that are gradually taking over its market share for these reasons.

In addition, the foamed polymeric layer or core that is intentionally developed within the mold during processing integral-skin foamed moldings creates an undesired insulative effect, which slows down the processing cycle even further. Also, prior research revealed the existence of a strong counter-proportional causality between the duration of the rotational foam molding cycle and the quality of the produced cellular morphologies. Therefore, in order to attempt to prevent the total extinction of this unique plastic processing technology, for which uniqueness a replacement alternative does not exist yet, and the absence of which would create huge negative consequences to its application industries (e.g., maritime, automotive, aerospace, signage etc.), there is an importunate need to investigate the related fundamental science and the underlying governing mechanisms the understanding of which will lead to the creative development of novel processing approaches the target of which would be to overcome the identified significant technological limitations associated with current methods for processing integral-skin cellular composites in rotational foam molding.

Background

Rotational foam molding has lately been brought into being a distinct plastic processing technology. Essentially, the manufacture of rotational moldings with a distinct non-foamed outer skin that encapsulates entirely a foamed core or layer requires both non-foamable and foamable plastic resins to be charged into the mold within an identical rotational foam molding cycle. This can be achieved either by interrupting the molding process, or continuously, in a single-charge fashion. Single-charge concepts are based on charging the mold with a mixture of predetermined quantities of non-foamable and foamable resins simultaneously at the outset of the cycle, so that the use of drop boxes or plastic bags becomes unnecessary. Although the single-charge processing concept is beneficial for improving the efficacy of the molding process and the structural homogeneity of the moldings, it has serious limitations because it suffers from inherently aggravating the fulfillment of crucial processing goals such as: (i) the execution of the adhesion of the non-foamable thermoplastic resin to the internal surface of the mold that should always take place prior to the thermal activation of the foaming resin (thereby avoiding skin protrusions), and (ii) obtaining a solid skin layer with a uniform thickness.

Continued on page 8

Industry News

Continued from Page 7

RRFM

The author's recent research efforts were particularly focused on investigating and understanding the scientific fundamentals that would enable to creatively decouple the process of the formation and shaping of the solid skin from the process of the development and propagation of the foamed layer or core the skin is encapsulating. As a result, an innovative extrusion-assisted rotational foam molding processing concept that exploits the synergistic effects resulting from the deliberate conjunction of extrusion melt compounding and traditional rotational molding was developed to address and alleviate the identified technological weaknesses of the process including the lengthy processing cycle time, the large energy consumption, and the lack of means for process control. The initial innovative concept went through a number of refinements and developments the latest of which represents a patented prototyped, experimentally characterized, and verified rotational foam molding method that is referred to as Rapid Rotational Foam Molding (RRFM) [1].

Rapid Rotational Foam Molding exploits the unique synergistic effects resulting from the deliberate conjunction of extrusion with the rotational molding process. It offers a design solution that completely decouples the shaping of the part's solid skin from the formation of the skin-encapsulated foamed layer or core. Thereby, improved process controllability, significantly shorter processing cycle duration and reduced energy consumption can be readily achieved. The Rapid Rotational Foam Molding processing concept can be summarized into four unique steps. Step 1: At the inception of the process, the mold is manually charged with a predetermined amount of non-foamable plastic resin in powder form, which will be used to create the part's solid skin. Step 2: The arm and the mold assembly are inserted into the oven by means of a carriage and translational mechanism. The mold rotates in a biaxial manner within the oven, utilizing the arm. This step is accomplished at a material-dependent elevated temperature for an accordingly set period of time to accomplish the creation of the skin. Simultaneously, the extruder is charged with predetermined amounts of dry blended polymer resin with a chemical blowing agent, suitable for achieving polymeric foam that exhibits a desired volume expansion ratio at a set melt temperature. Step 3: The arm and mold assembly are then translated towards the extruder, with the arm rotation switched to a uni-axial mode and the mold aligned with the extrusion port. The extruder subsequently fills the hot mold with extrudate comprised of the desired foam for a period of time dependent on the melt flow rate and screw RPM. The filling process occurs at the mold-extruder interface gate, which has been designed so as to seal the mold during the conventional rotational molding cycle, facilitate the introduction of foam to it during the foam filling stage, and allow the skin to self-heal after the filling process is accomplished thereby allowing the skin to settle back at its original location, undamaged. Step 4: The mold is then bi-axially rotated and cooled. Subsequently, the solidified part is removed [2-19].

Unlike previous approaches, the RRFM processing concept includes direct introduction of non-chilled extruded foam into a uni-axially rotating mold via a specially designed "self skin-repairing" injection port which makes it capable of achieving substantial reductions of the processing cycle time and energy consumption compared to traditional rotational molding of analog foams, thereby setting the new, greener, processing state-of-the-art in the field. However, more importantly, the successful inclusion of extrusion in the processing equation is potentially relaxing the constraints for introducing physical blowing agents in rotational foam molding, due to its atmospheric nature, for the very first time. Thereby, it is being envisioned that the RRFM technology can acquire the necessary capabilities to produce new classes of ultra low-density rotationally molded integral-skin cellular composites that are currently not achievable, and in a much better controllable fashion, with greatly improved opportunities for applying different fillers, and wider processing and materials windows.

Opportunities

In this context, it would be necessary to investigate the scientific fundamentals and the governing mechanisms of physical blowing agent based extrusion and/or injection molding foaming with a goal of establishing an engineering understanding of the technological potentials for developing a novel advanced family of melt extrusion- assisted or injection molding-assisted rotational foam molding processing concepts for fabricating new classes of advanced ultra lightweight integral-skin rotationally foam molded cellular composites combined with various nano-fillers, while simultaneously achieving unique morphological, mechanical, and insulative properties of the product in addition to significantly improving the efficiency of the cycle time, energy consumption, and control of the process.

Continued on page 9

Industry News

Continued from Page 8

The fundamental objective of this pioneering attempt includes successfully combining the science of plastics foaming based on applying physical blowing agents with the engineering of melt extrusion-assisted or injection molding-assisted rotational foam molding operations. It is aimed towards identifying, conceiving, establishing, developing, and experimentally verifying the necessary processing concepts and conditions for establishing a family of manufacturing processes for fabricating new classes of rotationally foam molded integral-skin cellular composites having ultra low-density foamed cores or layers by virtue of introducing physical blowing agents (e.g., CO2) and optionally a variety of enhancing nano- fillers in an direct-foaming operation, which approach is currently unprecedented.

The set of short-term objectives of the proposed research program will primarily include the design, analysis, and development of an interchangeable direct foaming melt extrusion-assisted and/or injection molding-assisted physical blowing agents-based experimental setup for Rapid Rotational Foam Molding that will be utilized to facilitate the understanding of the process and the experimental work intended to determine the feasibility of successfully developing a family of novel plastic foam fabrication technologies for ultra lightweight integral-skin ultra low-density rotationally foam molded integral-skin cellular polyolefin composites.

Conclusion

To date, applying chemical blowing agents was a common practice and a mandatory routine in rotational foam molding operations due to the intrinsic atmospheric nature of the process (vented molds). The newly patented rapid rotational foam molding process is expected to advance the scientific knowledge in the field and influence the direction of thought and activity by creating the scientific and engineering potentials for eliminating the blowing agent nature-related limitations in the manufacture of advanced ultra lightweight multi-layered ultra low- density rotationally foam molded cellular composites with or without nano-fillers for the first time. In addition, by applying a variety of nano-fillers the resulting new classes of ultra lightweight integral- skin rotationally foam molded cellular composites will be characterized with dramatically improved mechanical, strength-to-weight, insulative, and morphological properties that are currently not achievable.

References

1. R. Pop-Iliev, et. al., US Patent 8628704B2, January 14, 2014
2. Pop-Iliev, R., 2012, PPS-28, Pattaya, Thailand, Dec, 11-15, ID: P12012-616.
3. Pop-Iliev, R., 2011, Acta Physica Polonica A, 120, 2, 292.
4. Pop-Iliev, R., 2011, 13th YUCOMAT 2011, Herceg Novi, Montenegro, 72.
5. Pop-Iliev, R., 2010, PPS-27, Marrakesh, Morocco, ID: OP-11-833, 232.
6. Pop-Iliev, R., 2010, PPS-26 IST, Istanbul, Turkey, ID: S01-121, 61.
7. Pop-Iliev, R., 2010, IN-TECH 2010, Prague, Czech Republic, 534.
8. Pop-Iliev, R., 2010, 12th YUCOMAT 2010, Herceg Novi, Montenegro, 48.
9. Pop-Iliev, R., 2010, SPE ANTEC 2010, ID: 1030, 2301.
10. Pop-Iliev, R., 2009, E/A RM PPS 2009, Larnaca, Cyprus, ID: 72-O.
11. Pop-Iliev, R., 2009, World Journal of Engineering, 6, Suppl. 2009, 817.
12. Pop-Iliev, R., 2009, 17th Composites/Nano Engineering, Honolulu, Hawaii, USA, Paper #817.
13. Abdalla, E., and Pop-Iliev, R., 2009, SPE, ANTEC 2009, ID: ANTEC-0115-2009, 1382.
14. Christian, K., Abdalla, E., Eberle, G., and Pop-Iliev, R., 2009, SPE, ANTEC 2009, ID: ANTEC-0012- 2009, 1956.
15. Pop-Iliev, R., Christian, K., and Abdalla, E., 2009, PPS 25, Goa, India, Ref.#: GS-XI-OP6, 182.
16. Christian, K., and Pop-Iliev, R., 2008, SPE Foams 2008, Charlotte, North Carolina, Paper #9.
17. Abdalla, E., Christian K., and Pop-Iliev, R., 2008, SPE, ANTEC 2008, Paper # 0434, 2298.
18. Pop-Iliev, R., 2008, PPS 24, Salerno, Italy, II.65, Ref.#: S04-391.
19. Pop-Iliev, R., 2007, SPE, ANTEC 2007, Cincinnati, USA, Paper # 304017, 2732.

Designer's Corner

Product Design V.S. Part Design

By: Glenn Beall

The first two articles in this series dwelt on product design and the creative process that culminated in the refuse container concept sketch (Figure 1). The next challenge is to reduce that concept sketch to a detailed piece-part drawing or a CAD database. This is a critical part of the design process as this is the information the moldmaker will use to build the cavity that will produce the required refuse container. The molded part will only be as good as the cavity. The cavity cannot be better than the part drawing. This is why part design is just as important as product design. It is in this area of part design where many perfectly good product designs begin to fail.

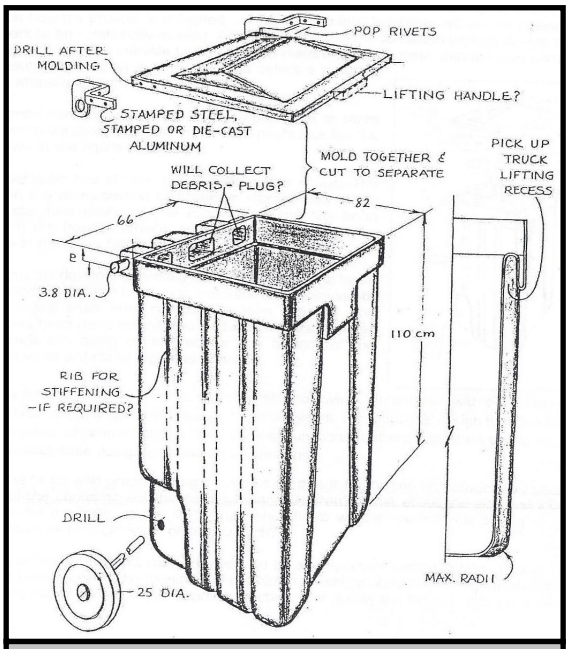

Figure 1. Refuse Container Concept Sketch

As the project progresses from the product design phase to the part design phase the designer's emphasis will change. All through the product design phase the designer was working in the creative realm of searching for structure, process, and material combination that would satisfy the product's functional requirements within an acceptable cost. This free-thinking part of the project is basically undisciplined, and there are few, if any, rules to guide or restrict the designer's thinking. The only important rule is that the resulting product concept must be acceptable and is hopefully better than competitive products.

Piece-part design, on the other hand, is highly disciplined. By trial, error, and research the industry has evolved a list of part design guidelines. By following these guidelines it is possible for both experienced and novice designers to produce an acceptable part design.

DESIGNING FOR THE PROCESS

All plastics molding processes have their own special capabilities and limitations. The rotational molding process is unique. This cavity-coating, sintering process imposes limitations on what can and cannot be molded. This process is at its best producing hollow shapes with smoothly blended contours. For example, the solid reinforcing rib (Figure 2A) can be produced by most closed-mold, melt-flow plastics processes, but it is a difficult shape to produce by rotational molding. A hollow rib is an ideal stiffening rib shape for rotational molding (Figure 2B). In the final analysis the best part design is the one that adapts to the process without exceeding its capabilities. The part design details that are suitable for rotational molding will be defined in this ongoing series of articles.

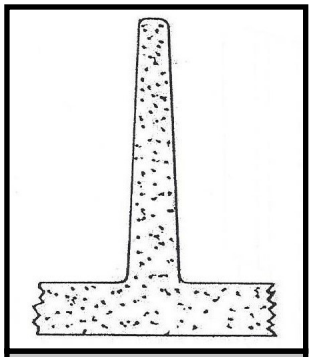

Figure 2A Solid Rib Bad

DESIGNING FOR THE PLASTIC MATERIAL

Rotational molding is a material-dependent plastic part molding process. The high oven temperature and lack of melt-flow pressures limits the type of plastics that are suitable for the process. These materials in turn impose limitations on the shape of the parts that can be produced. For example, nylon requires larger corner radii than PE. PVC can be molded with smaller draft angles than PP. It would not be unusual to discover that a product being produced in LLDPE could capture a new market if its operational temperature could be increased. The logical answer to this opportunity would be to change to HDPE, PP or nylon. These high-temperature, but stiffer materials might not be moldable in the same undercut mold that produced the LLDPE parts. The part design guidelines will have to be adjusted for the different plastic materials. Where these differences are important they will be defined in the design guidelines presented in these articles.

Continued on Page 14

Do you plan to change your email address? Make sure your email address is updated at

http://www.4spe.org/forms/changeaddress.php

and continue to get your copy of your newsletter!

For information on conferences and more events, see the SPE website. You can find a thorough list of events worldwide for the plastics industry at:
.http://www.4spe.org/training/eventcalendar.php

Designer's Corner

Continued from Page 12

PART DESIGN CONSIDERATIONS

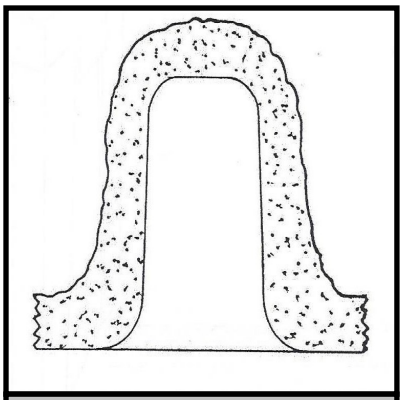

Figure 2B Hollow Rib Good

During the part design phase of a project the designer concentrates on the multiplicity of inter-related details that combine to make a whole part. The product design requirements for a chair armrest, a storage tank, and a tractor instrument panel are all very different. The individual part design details for these three products are, however, exactly the same. The plastic material and the process do not recognize the differences between a large tank and a small armrest. The material only knows that it can produce the hollow reinforcing rib as shown in Figure 2B, but not the solid rib shown in Figure 2A. Designing for the process and material can be the difference between success and failure. Fortunately, these design details for rotational molding have been evolved and highly refined.

The product depicted in Figure 1 could be considered to be a complex structure. This structure can, however, be simplified by dividing it into its individual parts. Taken individually the body, lid, wheels, and lid hinge-plates are all relatively simple parts.

The most complex part in this assembly is the body shown in Figure 3. This part can also be simplified by breaking it down into its individual elements. For example, the body is nothing more than five flat plates (with or without ribs) joined together at their edges with radii plus the handles, lifting pocket, and wheel recesses. If each of these simple details is designed correctly, the whole part will be properly proportioned for the chosen molding process and the plastic material. These material- and process-related part design details will be reviewed in future articles.

To be continued…

This article is a condensed extract from G. L. Beall's Hanser Publishers book entitled "Rotational Molding Design, Materials, Tooling, & Processing" available at hanser@ware-pak.com or phone (877) 751-5052.

Industry News

Innovative and Safe Aerosol Products

Aerosol usage in the rotomolding process has become a permanent feature in many manufacturing facilities. Some companies can use more than 10,000 spray cans a year. Most of these aerosols are processing aids used during production, and many contain some volatile solvents and carriers. The products that contain volatile solvents clearly display and explain all the necessary dangers of the use of these products, and yet many plant operators are not paying attention to the warnings. This is not only dangerous for the operators. In an industry that works with huge gas burners, it could be a disaster waiting to happen.

C4 Polymers believes the industry needs to address this issue with better training in the use of aerosols and encourage manufactures to move towards the use of non-volatile carriers.
There are new products that are water-based or based on non-volatile carriers such as Protolitte spray and Protolitte paste that are now readily available.

To learn more about the innovative products that use nonvolatile carriers please visit C4 Polymers at www.c4polymers.com.

What can SPE Membership do for you?

Looking for a career change in the plastics industry? Go to

http://www.4spe.org/membercenter/careers/index.php

You will find advice on managing change, search for opportunities, even post your resume.

Society of Plastics Engineers
Division of Rotational Molding
13 Church Hill Road
Newtown, CT. 06470

Phone: 847-549-9970
Fax: 847-549-9935

Rotational Molding Division of the Society of Plastics Engineers.

Your Award Winning Newsletter - 2005, 2006 & 2007

Classified Advertising Opportunities

The **RMD Newsletter** is an award-winning publication available to thousands of SPE members on the RMD website.

This quarterly publication is well-read and received by international organizations and individuals involved in the rotational molding industry.

The RMD is now offering the opportunity for you to reach the global rotational molding markets by placing classified advertising in upcoming editions.

RMD Classified Ads provide an excellent opportunity for you to:

- ***Sell new and used rotational molding equipment and accessories***
- ***Promote goods and services to the rotational molding industry***
- ***Advertise for help wanted and positions wanted within the rotational molding industry***

View the current and previous editions of the RMD Newsletter online at www.rotational-molding.4spe.org

Nominal rates:

Business card ads only $100/issue, $350/year

Classified ads for only $100 per column inch

Positions Wanted, up to 75 words, free of charge to all SPE members!

Positions Wanted ads may be sent to:
Melissa.inman@gulfviewplastics.com
(919)-888-0940

For paid advertising contact:
Russ Boyle
(727)-379-3072
Russ.boyle@gulfviewplastics.com

MEMBERSHIP APPLICATION
(Online at www.4spe.org/join)

Society of Plastics Engineers
6 Berkshire Blvd., Suite 306
Bethel, CT 06801-1065 USA

Membership Application

PH: 203-775-0471 • Fax: 203-775-8490
www.4spe.org • membership@4spe.org

Contact Information *Please print clearly*

First Name (Given Name) Middle Name

Last Name (Family Name)

Company Name/University Name (if applicable)

Mailing Address is: ☐ Home ☐ Business Gender: ☐ Male ☐ Female (for demographic use only)

Address Line 1

Address Line 2

Address Line 3

City State/Province

Country Zip/Postal Code Phone

Preferred Email (This will be your member login and is required for usage of online member services)

Alternate Email

Date of Birth (*Required* for Young Professional membership)

Graduation Date (*Required* for Student membership) Job Title

Membership Types *Check one*

☐ **Student: $31** (Graduation date is required above)
☐ **Young Professional: $99** (Professionals under the age of 35. Date of birth is required above)
☐ **Professional: ~~$144.00~~ $129** (Includes $15 new member initiation fee)

Choose 2 *free* Technical Division and/or Geographic Section Member Groups. →

1. _____ 2. _____

Additional groups may be added for $10 each. Add Special Interest Groups at no charge.

1. _____ 2. _____
3. _____ 4. _____

Dues include a 1-year subscription to *Plastics Engineering* magazine-$38 value (non-deductible).
SPE membership is valid for 12 months from the date your membership is processed.

Payment Information Payment must accompany application. No purchase orders accepted.

☐ Check Enclosed Amount _____

Charge: ☐ Visa ☐ Mastercard ☐ American Express Expiration Date: _____

Account Number: _____

Amount Authorized: _____ CSC#: _____ Last 3 digits from the back of MC/Visa. 4 digits from the front of AMEX.

Cardholder's Name (as it appears on card): _____

Signature of Cardholder: _____

Payment by Wire Transfer Instructions

You **must** include account number +ABA number + bank fees.
Please include the Member ID# and Name so we may apply payment to the correct person.

USD: WELLS FARGO: 108 Federal Road, Danbury, CT 06811 USA

ACCT #2681786097 ABA #121000248 SWIFT CODE #WFBIUS6S

The SPE Online Member Directory is included with membership. Your information is automatically included unless you indicate otherwise.

_____ Exclude my email address from the Online Membership Directory
_____ Exclude all my information from the Online Membership Directory
_____ Exclude my address from 3rd party mailings

By signing below, I agree to be governed by the Bylaws of the Society and to promote the objectives of the Society. I certify that statements made in the application are correct and I authorize SPE and its affiliates to use my phone, fax, address and email to contact me.

Signature _____ Date _____

Technical Division Member Groups - Connect with a global community of professionals in your area of technical interest.

☐ Additives & Color Europe - D45
☐ Applied Rheology - D47
☐ Automotive - D31
☐ Blow Molding - D30
☐ Color & Appearance - D21
☐ Composites - D39
☐ Decorating & Assembly - D34
☐ Electrical & Electronic - D24
☐ Engineering Properties Structure - D26
☐ European Medical Polymers - D46
☐ European Thermoforming - D43
☐ Extrusion - D22
☐ Flexible Packaging - D44
☐ Injection Molding - D23
☐ Medical Plastics - D36
☐ Mold Making & Mold Design - D35
☐ Plastics Environmental - D40
☐ Polymer Analysis - D33
☐ Polymer Modifiers & Additives - D38
☐ Product Design & Development - D41
☐ Rotational Molding - D42
☐ Thermoforming - D25
☐ Thermoplastic Materials & Foams - D29
☐ Thermoset - D28
☐ Vinyl Plastics - D27

Geographic Section Member Groups - Network with local industry colleagues.

☐ Alabama/Georgia-Southern
☐ Asean*
☐ Australia-New Zealand
☐ Benelux
☐ Brazil
☐ California-Golden Gate
☐ California-Southern California
☐ Caribbean
☐ Carolinas
☐ Central Europe
☐ China
☐ Colorado-Rocky Mountain
☐ Connecticut
☐ Eastern New England
☐ France
☐ Hong Kong
☐ Illinois-Chicago
☐ India
☐ Indiana-Central Indiana
☐ Israel
☐ Italy
☐ Japan
☐ Kansas City
☐ Korea
☐ Louisiana-Gulf South Central
☐ Mexico-Centro
☐ Michigan-Detroit
☐ Michigan-Western Michigan
☐ Middle East
☐ Nebraska
☐ New Jersey-Palisades
☐ New York
☐ North Carolina-Piedmont Coastal
☐ Ohio-Akron
☐ Ohio-Cleveland
☐ Ohio-Miami Valley
☐ Ohio-Toledo
☐ Oklahoma
☐ Ontario
☐ Oregon-Columbia River
☐ Pennsylvania-Lehigh Valley
☐ Pennsylvania-Northwestern Pennsylvania
☐ Pennsylvania-Philadelphia
☐ Pennsylvania-Pittsburgh
☐ Pennsylvania-Susquehanna
☐ Portugal
☐ Quebec
☐ Spain
☐ Taiwan
☐ Tennessee-Smoky Mountain
☐ Tennessee Valley
☐ Texas-Central Texas
☐ Texas-Lower Rio Grande Valley
☐ Texas-North Texas
☐ Texas-South Texas
☐ Tri-State
☐ Turkey
☐ United Kingdom & Ireland
☐ Upper Midwest
☐ Utah-Great Salt Lake
☐ Virginia
☐ Washington-Pacific Northwest
☐ West Virginia-Southeastern Ohio
☐ Western New England
☐ Wisconsin-Milwaukee

*Asean: Indonesia, Malaysia, Phillipines, Singapore, Thailand, Cambodia, Laos & Vietnam

Special Interest Groups - Explore emerging science, technologies and practices shaping the plastics industry. Choose as many as you would like, at no charge.

☐ Additive Manufacturing / 3D Printing - 033
☐ Advanced Energy Storage - 024
☐ Alloys & Blends - 010
☐ Bioplastics - 028
☐ Failure Analysis & Prevention - 002
☐ Joining of Plastics & Composites - 012
☐ Marketing & Management - 029
☐ Non-Halogen Flame Retardant Tech. - 030
☐ Plastic Pipe & Fittings - 021
☐ Plastics Educators - 018
☐ Plastic in Building and Construction - 027
☐ Quality/Continuous Improvement - 005
☐ Radiation Processing of Polymers - 019
☐ Reaction Injection Molding - 032
☐ Thermoplastic Elastomers - 006

Recommended by (optional) _____ ID# _____

PE15

RMD Interim Financial Report

SPE's Rotational Molding Division
Annual Financial Report 2013-2014
July 1, 2013 to June 30, 2014

	Actual (proposed)	Budget
Cash Balance: Beginning of Period	$61,391.45	
Cash Receipts in Period:		
SPE Rebate	$1,018.76	$1,160.00
Interest	$40.33	$32.00
Newsletter Ads/Sponsorships	$0.00	$2,000.00
Scholarships/Grants Fund	$20.00	$0.00
TopCon (TopCon 2013)	$2,885.82	$6,000.00
Total Income in Period	$3,964.91	$9,192.00
Total Cash to be accounted for	$65,356.36	
Cash Disbursements in Period:		
Board Meetings (teleconference)	$0.00	$500.00
TopCon (TopCon 2014)	$5,500.00	$500.00
e-Newsletter Printing/Mailing	$0.00	$0.00
Awards (Student Papers)	$0.00	$0.00
Scholarships/Grants	$0.00	$2,000.00
ANTEC Expenses	$0.00	$200.00
BOD & ANTEC Speakers Awards	$814.17	$1,500.00
President and Past Presidents Awards	$114.97	$500.00
Membership Outreach	$0.00	$250.00
Website Hosting	$269.86	$200.00
Election, Ballot, Postage	$0.00	$0.00
RMD Design Competition	$9,889.47	$2,000.0
Website Domain name (2013-2022)	$440.80	$0.00
Webinar	$0.00	$0.00
MISC (Plastics News Advertisement)	$3,600.00	$0.00
Checking Accounts Check-Leaves	$33.15	$0.00
Checking Statement expenses	$6.00	$0.00
Total Disbursements in Period	$20,668.42	$7,650.00
Cash Balance End of Period $	44,687.94	

The Cash Balance is made up as follows:

Scholarships/Grants (savings acc.)	$2, 042.69
Checking Account	$261.71
Savings Account	$42,383.54
Total Cash Balance	**$44,687.94**

Respectfully submitted
By
Rex Kanu
Treasurer RMD

SPE's **Digitized Presentations** are multimedia recordings of past e-Live™ Presentations. Available for purchase on CD-ROM, they include presentations on more than 15 different plastics processes. Past e-Live™ Presentations are archived weekly. Go http://www.4spe.org/elearning/ for more information.

Interested in sponsoring the RMD Newsletter? Please contact : Russ Boyle at Russ.boyle@gulfviewplastics.com or call at (727) 379-3072

Welcome to SPE's Ask PiP (People in Plastics) discussion forums.
Ask PiP is a question/answer forum for the plastics industry.

This free service has been completely redesigned for easier access, utilization and functionality. We've added many new features to save you time and allow easier navigation. Ask PiP will now accommodate everyone. You can contact others in your field, post your questions or supply answers. All for FREE.
http://www.askpip.org/

SPE-RMD LEADERSHIP ROSTER 2014-2015
Officers/Directors/Chairman

Barry Aubrey
3694 TanBark Court
Amelia, OH 45102
(513)-892-9336
abiff99@aol.com
Past Division Chairman 2000-2001

Glenn Beall
Glenn Beall Plastics
32981 N. River Road
Libertyville, IL 60048
(847)-549-9970
glennbeallplas@msn.com
Historian
Past Division Chairman 1999-2000

Russ Boyle
Gulf View Plastics
18816 Oak Way Drive
Hudson, FL 34667
(727)-379-3072
Cell (270)-823-2256
Russ.boyle@gulfviewplastics.com
Treasurer

Rob Donaldson
M Holland Company
400 Skokie Blvd.
Suite 600
Northbrook, IL 60062
(682)-214-1828
Cell (682)-351-8315
rdonaldson@mholland.com
Past Division Chairman 2012-2015

Melissa Inman
Gulf View Plastics
109 Lands End Dr.
Williamsburg, VA 23185
(919)-888-0940
Melissa.inman@gulfviewplastics.com
Publications/Newsletter Chairman
Web Page Chairman
Director 2014-2017

Tom Innis
Avantech
1021 Madison St.
Brainerd, MN 56401
(440) 384-7654
Email: tinnis@avantech.com
Director 2015-2018

Gary McQuay
Engineering Manager
Plastics Innovation & Resources Center
DIF26
Pennsylvania College of Technology
One College Avenue
Williamsport, PA 17701
(570)-321-5533 Ext. 7681
Cell (570)-490-4667
Chairman 2015-

Dr. Peter Mooney
Plastics Custom
Research Services
695 Burton Road
Advance, NC 27006
(336)-998-8004
PlasRes@aol.com
Secretary
Publication/Newsletter Co-Chairman

Bruce Muller
Plastics Consulting, Inc.
682 SW Falcon Street
Palm City, FL 34990
(772)-781-6699
plasticsC@aol.com
Honorary Member

Michael Paloian
Integrated Design Systems
74 West Main Street
Oyster Bay, NY 11771
(516)-482-2181 x 101
paloian@idsys.com
Webinar Chairman
Past Division Chairman 2007-2008

Jon Ratzlaff
Chevron Phillips Chemical Co. LP
146 Plastics Tech Center
Phillips 66
Research Center
Highways 60 & 123
Bartlesville, OK 74003-6670
(918)-977-4761
RATZLJD@cpchem.com
Inter/Intrasociety Chairman
Past Division Chairman
2001-2002
SPE International President

Rotational Molding Division Past Chairs

Glenn Beall	1999-2000	Paul Nugent	2005-2006
Barry Aubrey	2000-2001	Ken Wessler	2006-2007
Jon Ratzlaff	2001-2002	Michael Paloian	2007-2008
Marshall Lampson	2002-2003	Greg Stout	2008-2009
Ken Pawlak	2003-2004	C. “Hank” White	2009-2012
Larry Schneider	2004-2005	Rob Donaldson	2012-2015

Continued on page 20

SPE-RMD LEADERSHIP ROSTER 2014-2015
Officers/Directors/Chairman

Dr. Denis Rodrigue
University Laval
1065 Avenue De La Medecine
Dept. Chemical Engineering RM 3546
Quebec City, QC G1V OA6
Canada
(418)-656-2903
Denis.rodrigue@gch.ulaval.ca
ANTEC Technical Program Chairman
Director 2014-2017

Larry Schneider
Schneider Plastics, Inc.
39155 N. Pine Grove Avenue
Wadsworth, IL 60083
(847)-623-7535
schplastic@aol.com
Awards Chairman
Past Division Chairman
2004-2005

Thomas Steele
Cytec Industries
1937 West Main Street
Stamford, CT 06904
(203) 321 2261
Thomas.steele@cytec.com
Director 2014-2017

Ken Wessler
Hedstrom
P.O. Box 99
Dunkirk, OH 45836
(419)-294-7269
kenwessler@prodigy.net
Grants and Scholarships Chairman
Past Division Chairman
2006-2007

Charles (Hank) White
Pennsylvania College of Technology
PMC DIF 26
One College Avenue
Williamsport, PA 17701
(570)-321-5533
cwhite@pct.edu
Past Division Chairman

Larry Whittemore
Stoner, Inc.
P.O. Box 65
1070 Robert Fulton Highway
Quarryville, PA. 17566
(717)-786-7355 Ext. 3118
Lwhittemore@StonerSolutions.com
Director 2015-2018

SPE Liaison

Kathy Schacht
Society of Plastics Engineers
6 Berkshire Blvd. Suite 306
Bethel, CT 06801-1065
(203) 740 5430
Cell (203)-775-8490
kschacht@4spe.org

International Ambassadors

Roy Crawford
18 Stonebridge Estate
RD 9
Hamilton 1706
New Zealand
67 64 7838 4673
r.crawford@waikato.ac.nz

Mark Kearns
Queens University
Ashby Building
Stranmillis Road
Belfast BT9 5AH
44 2890974700
m.kearns@qub.ac.uk

Volunteers

John Bartolomucci
Plastics and Polymer Engineering Tech.
DIF 27
Pennsylvania College of Technology
One College Avenue
Williamsport, PA 17701
(570)-320-2400 Ext. 7012
jbartolo@ptc.edu

Joseph Lindsey
PlayPower, Inc.
907 E. County Road
Monett, MO 65708
(417)-354-2563
Joe.lindsey@playpower.com

The Rotational Molding Division would like to acknowledge and thank the following organizations that share their resources with the RMD by allowing and encouraging their employees to serve as members of the RMD Board of Directors.

PCRS
PLASTIC CUSTOM RESEARCH SERVICES

PLASTICS CONSULTING, INC.
WWW.PLASTICSCONSULTING.COM

CRI
CUSTOM RESINS®

M. HOLLAND™
THE GOLD STANDARD IN PLASTICS

Glenn Beall Plastics, Ltd.
Product Design
& Development

nexeo® solutions

ExxonMobil Chemical

Pennsylvania College of Technology
PENNSTATE

Plastics Innovation & Resource Center
www.pct.edu/pirc

SELJAN COMPANY INC.

Chevron Phillips Chemical Company LP